Journal of the Serbian Chemical Society
JSCS-info@shd.org.rs • www.shd.org.rs/JSCS
J. Serb. Chem. Soc. 91 (10) S300–S304 (2026) *Supplementary material*

SUPPLEMENTARY MATERIAL TO

Systematic investigation into the physicochemical properties of deep eutectic $AlCl_3$/amide electrolytes with additives

CHENGYUAN LIU[1]*, CHAOYANG JIE[1], JIANGYU YU[2], YAN GUO[1], FENGCUI LI[1], SHIYAN LIU[1] and HONGLIANG CHENG[1]

[1]*Henan University of Urban Construction, Pingdingshan 467036, China and*
[2]*School of Metallurgy, Northeastern University, Shenyang 110819, China*

J. Serb. Chem. Soc. 91 (10) (2026) 1007–1024

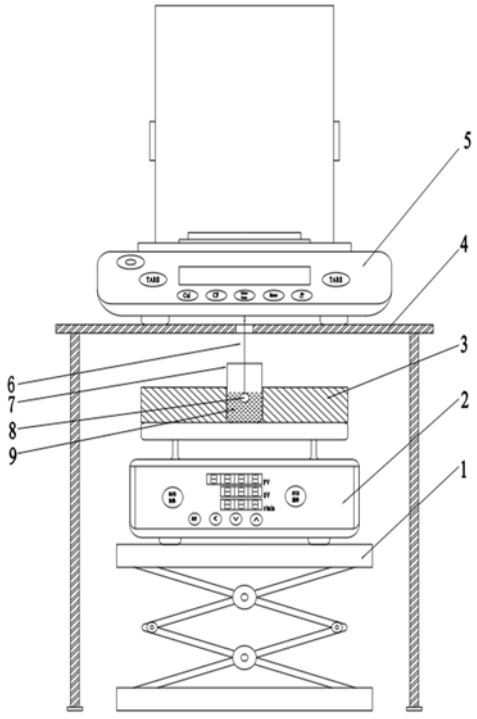

1- lifting table; 2- intelligent digital display magnetic heating plate; 3- insulation cotton; 4- trestle table; 5- electronic balance; 6- platinum wire; 7- beaker; 8- platinum ball; 9- electrolyte

Fig. S-1. Schematic diagram for the density measurement.

* Corresponding author. E-mail: liu_chy@126.com

Available online at https://www.shd.org.rs/JSCS/

(CC) 2026 Serbian Chemical Society.

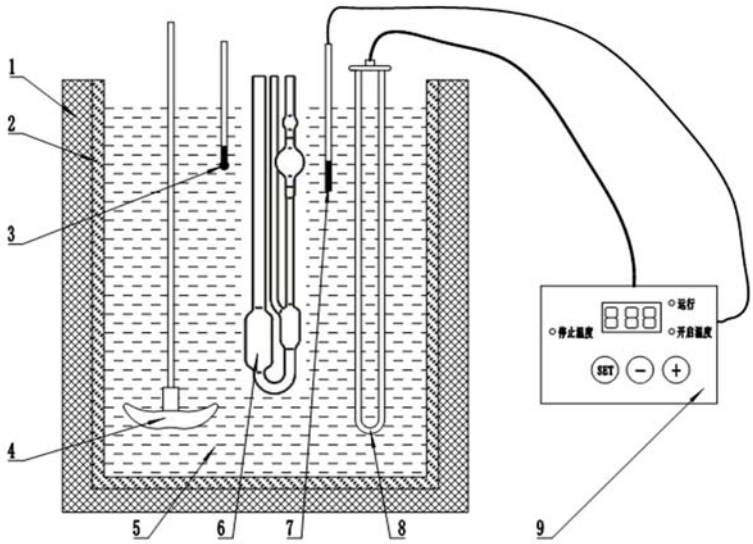

1- insulation cotton; 2- quartz cell; 3- thermometer; 4- stirring paddle; 5- dimethicone; 6- ubbelodhe viscometer; 7- temperature sensor; 8- heating bar; 9- microcomputer intelligent temperature controller

Fig. S-2. Schematic diagram for the viscosity measurement.

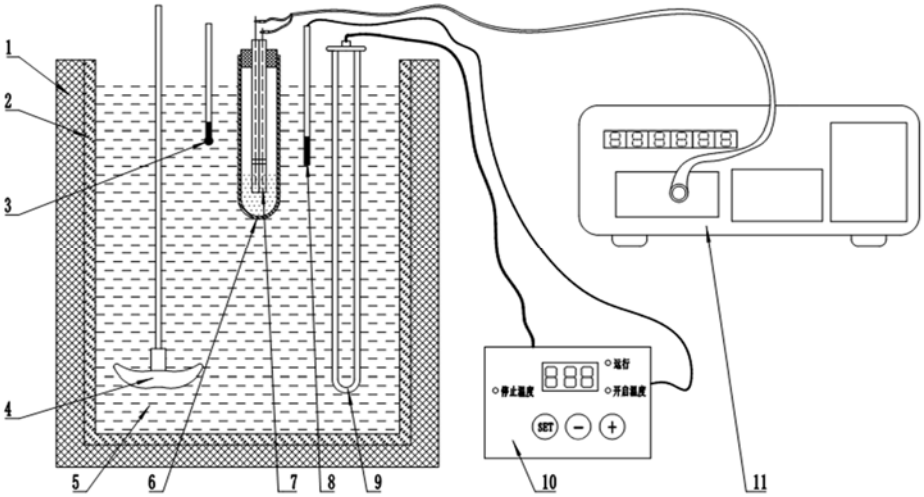

1- insulation cotton; 2- quartz cell; 3- thermometer; 4- stirring paddle; 5- dimethicone; 6- quartz tube; 7- conductance cell; 8- temperature sensor; 9- heating bar; 10- microcomputer intelligent temperature controller; 11- agilent impedance meter

Fig. S-3. Schematic diagram for the electrical conductivity measurement.

(CC) 2026 Serbian Chemical Society.

TABLE S-I. Density of $AlCl_3$-AcA and $AlCl_3$-Ur electrolytes with various additives at different temperatures

T (K)	ρ (g·cm^{-3})								
	blank	LiCl	LiBr	NaCl	NaBr	DCE	EC	THF	EMIC
	$AlCl_3$-AcA								
313	1.456	1.460	1.469	1.456	1.474	1.450	1.455	1.444	1.437
323	1.447	1.452	1.461	1.449	1.466	1.443	1.448	1.436	1.430
333	1.439	1.443	1.454	1.442	1.458	1.435	1.440	1.428	1.422
343	1.430	1.435	1.446	1.434	1.450	1.427	1.431	1.420	1.415
353	1.421	1.428	1.437	1.427	1.442	1.419	1.423	1.413	1.407
363	1.414	1.421	1.430	1.420	1.435	1.413	1.416	1.404	1.399
373	1.406	1.413	1.423	1.413	1.426	1.407	1.409	1.397	1.392
	$AlCl_3$-Ur								
313	1.542	1.547	1.564	1.553	1.567	1.546	1.548	1.520	1.523
323	1.535	1.539	1.556	1.546	1.560	1.539	1.541	1.513	1.515
333	1.527	1.532	1.548	1.537	1.552	1.532	1.534	1.506	1.508
343	1.519	1.524	1.540	1.529	1.544	1.524	1.526	1.498	1.501
353	1.511	1.516	1.532	1.521	1.536	1.516	1.519	1.491	1.493
363	1.503	1.509	1.525	1.513	1.529	1.509	1.511	1.483	1.485
373	1.496	1.502	1.517	1.507	1.522	1.501	1.504	1.476	1.478

TABLE S-II. Least-squares fitted parameters of density equation for $AlCl_3$-AcA and $AlCl_3$-Ur electrolytes with various additives

Additives	$\rho = a+bT$ (g·cm^{-3})		
	a	$-b\times10^{-4}$	R^2
	$AlCl_3$-AcA		
blank	1.7144	8.2786	0.9987
LiCl	1.7015	7.7429	0.9981
LiBr	1.7106	7.7214	0.9988
NaCl	1.6795	7.1500	0.9997
NaBr	1.7221	7.9286	0.9995
DCE	1.6789	7.3214	0.9964
EC	1.6986	7.7857	0.9983
THF	1.6898	7.8571	0.9994
EMIC	1.6743	7.5714	0.9996
	$AlCl_3$-Ur		
blank	1.7866	7.8000	0.9991
LiCl	1.7814	7.5000	0.9983
LiBr	1.8086	7.8214	0.9996
NaCl	1.7990	7.8571	0.9978
NaBr	1.8052	7.6074	0.9992
DCE	1.7810	7.5000	0.9997
EC	1.7797	7.3929	0.9996
THF	1.7517	7.3929	0.9996
EMIC	1.7577	7.5000	0.9995

(CC) 2026 Serbian Chemical Society.

TABLE S-III. Viscosity of $AlCl_3$-AcA and $AlCl_3$-Ur electrolytes with various additives at different temperatures

T (K)	η (mPa·s)								
	blank	LiCl	LiBr	NaCl	NaBr	DCE	EC	THF	EMIC
	$AlCl_3$-AcA								
313	46.144	45.960	46.537	44.799	47.528	40.904	46.478	41.364	38.372
323	30.017	30.033	32.387	31.880	33.112	28.952	32.121	28.995	27.301
333	22.060	21.998	23.613	22.857	24.040	20.635	23.769	21.271	20.154
343	16.709	16.524	17.783	17.092	18.033	16.339	18.007	16.301	14.858
353	13.132	12.831	14.039	13.630	13.809	12.625	14.216	12.705	11.829
363	10.587	10.222	11.185	10.769	11.351	10.348	11.157	10.257	9.686
373	8.745	8.445	9.156	9.108	9.247	8.533	8.862	8.548	8.084
	$AlCl_3$-Ur								
313	48.967	44.455	47.483	49.627	50.558	40.782	71.298	45.531	39.131
323	33.931	31.711	32.741	33.741	35.061	28.449	46.736	31.366	27.327
333	24.575	22.377	24.378	24.587	25.318	21.097	31.016	23.798	20.446
343	18.760	17.137	18.274	18.013	18.618	16.421	21.638	17.526	15.716
353	14.716	13.264	14.483	14.662	14.885	13.303	16.710	13.698	12.671
363	11.844	10.591	11.572	11.698	11.760	10.946	12.992	11.144	10.169
373	9.307	8.945	9.618	9.699	9.748	9.336	11.133	9.356	8.538

TABLE S-IV. Conductivity of $AlCl_3$-AcA and $AlCl_3$-Ur electrolytes with various additives at different temperatures

T (K)	σ (mS·cm^{-1})								
	blank	LiCl	LiBr	NaCl	NaBr	DCE	EC	THF	EMIC
	$AlCl_3$-AcA								
313	2.35	2.70	2.58	2.52	2.50	2.45	2.19	2.46	2.99
323	3.16	3.73	3.41	3.28	3.33	3.26	2.92	3.27	4.03
333	4.21	4.81	4.55	4.27	4.37	4.30	3.77	4.21	5.09
343	5.34	6.21	5.73	5.58	5.68	5.45	4.76	5.40	6.37
353	6.77	7.64	7.32	7.04	6.96	6.87	5.98	6.87	7.85
363	8.08	9.40	8.62	8.41	8.36	8.39	7.17	8.21	9.21
373	9.46	11.06	10.39	10.30	9.64	10.38	8.41	9.98	10.96
	$AlCl_3$-Ur								
313	2.34	2.66	2.73	2.60	2.61	2.34	1.97	2.42	3.04
323	3.19	3.60	3.69	3.52	3.57	3.57	2.70	3.27	4.02
333	4.18	4.73	4.82	4.63	4.72	4.22	3.57	4.22	5.21
343	5.22	5.97	6.05	5.85	6.00	5.24	4.61	5.31	6.46
353	6.50	7.57	7.48	7.36	7.24	6.76	5.80	6.60	7.94
363	7.81	9.20	9.14	9.07	8.79	7.96	6.95	7.95	9.37
373	9.31	11.04	10.95	10.67	10.57	9.41	8.30	9.42	11.04

(CC) 2026 Serbian Chemical Society.

TABLE S-V. Molar conductivity of $AlCl_3$-AcA and $AlCl_3$-Ur electrolytes with various additives at different temperatures

T (K)	σ_m (mS·cm^2·mol^{-1})								
	blank	LiCl	LiBr	NaCl	NaBr	DCE	EC	THF	EMIC
	$AlCl_3$-AcA								
313	163.19	184.50	176.98	173.30	171.52	170.72	151.71	171.10	212.47
323	220.80	256.28	235.19	226.65	229.71	228.27	203.26	228.71	287.77
333	295.80	332.55	315.33	296.49	303.10	302.76	263.88	296.10	365.50
343	377.56	431.74	399.30	389.62	396.14	385.89	335.28	381.94	459.68
353	481.70	533.76	513.30	493.97	488.10	489.17	423.58	488.31	569.86
363	577.75	659.96	607.42	593.01	589.15	599.94	510.37	587.30	672.13
373	680.28	780.90	735.75	729.87	683.64	745.41	601.62	717.49	803.98
	$AlCl_3$-Ur								
313	153.87	172.13	176.52	168.21	169.05	153.49	128.73	160.47	204.60
323	210.86	234.01	239.82	228.76	232.27	208.87	177.23	217.83	271.99
333	277.74	309.07	314.88	302.66	308.67	272.71	235.41	282.42	354.13
343	348.68	392.14	397.29	384.42	394.42	348.66	305.58	357.27	441.15
353	436.48	499.86	493.75	486.18	478.40	425.42	386.24	446.14	545.12
363	527.23	610.31	606.10	602.31	583.48	514.75	465.27	540.30	646.76
373	631.43	735.78	729.95	711.38	704.87	608.70	558.23	643.24	765.64

(CC) 2026 Serbian Chemical Society.